Technical Regulations for Applications of CN2000® Series of Cementitious Capillary Crystalline Waterproofing (CCCW) Products

Table of Contents

Technical Regulations for Applications of CN2000® Series of Cementitious Capillary Crystalline Waterproofing (CCCW) Products

1. General Principals

1.1 In order to meet project requirements of various **CN2000®** users and to ensure Waterproof **CN2000®** products are used effectively, the present technical regulations are based on the "Institute of Physical and Chemical Engineering of the Nuclear Industry."

1.2 **CN2000®** products can be applied using multiple methods, including surface trowel coating, brush coating, mechanical spray coating and pressure grouting, which are adaptive to the various waterproof and anti-corrosive projects of ground and underground building structures as well as metallic components.

1.3 Before beginning a waterproof project with **CN2000®** products, a thorough investigation should conducted on the project to obtain the proper data be made on the project to get the relative information and data enough and do the design for the project construction carefully by following the policy of "comprehensively treating a leakage in combination of preventing, draining, cutting off and plugging up the leakage with a proper method and according to the practical condition."

1.4 The use of **CN2000®** products must be based on the present technical regulations. The design, construction and acceptance of various waterproof projects must be made in compliance with the current standards.

2. Technical Terminology

2.1 ***Durable limit of the waterproof layer***
It is the use term of the waterproof layer calculated by year at the normal usage condition.

2.2 ***One waterproof layer***
A waterproof layer, with the ability to waterproof independently.

2.3 ***Cementitious capillary crystalline waterproofing materials***
It is the rigid waterproof components at the powder state that were made from cement, quartz powder, active substances and various additives. The active substance in these materials can permeate into the cracks and pores in the concrete. As long as there is water, the silicates, aluminates and dissociated calcium oxide in the concrete engender reaction with water under the catalysis of active substances and produce new crystalline along the cracks, which plugs up the passages of water. Therefore, the waterproof effect is achieved.

2.4 Polymer modified cementitious waterproofing coating

After dehydration, the slurry of the materials can form an elastic crystalline film at the network state on the surface of the structure. This is the waterproof material that is adaptive to the elastic deformation.

2.5 Materials for quickly plugging up leakage

Waterproofing components that can plug up a leak quickly because they have the ability to swell and consolidate when introduced to water.

2.6 Capacity of self-healing

The cementitious capillary crystalline waterproofing materials have an active chemical compound that is capable of self-healing. When dry, the compound is in a dormant state. When it is introduced to water, it becomes active immediately. When activated, the lattices of the aggregate in the waterproof mixed with the dehydrated cement pastes in the concrete structure reproduce crystalline, which plugs up the tiny cracks and self-heals the structure.

2.7 Operable time for the slurry of the waterproof materials

The amount of time from stirring the waterproof materials to be mixed with water to the initial setting of the mixed waterproof materials and water (i.e. initial setting time).

2.8 Impermeability of the coating layer (waterproof coating)

In standardized laboratory test conditions, increasing pressure is gradually applied to the test subject. The maximum pressure the subject can withstand for waterproofing is referred to as its impermeability, which is calculated as MPa.

2.9 Corrosion resistance coefficient K6

The ratio of the sample's mechanical strength (including bend strength, compressive strength or impervious pressure, etc.) when immersed in a concentrated special solution for six months to the sample's corresponding mechanical strength when it is immersed in water for six months.

2.10 Backup materials

In order for the sealing materials to maintain their maximum elasticity while waterproofing a deformed joint, the sealing materials are made only to adhere to the seam wall without conglutination of the bottom of the seam and protective layer. For this reason, the foam plastics or spitballs are often used to separate the sealing materials from the top and bottom of the seam. These kind of isolating materials are called as the backup materials.

2.11 *Isolating course*

In order to make the waterproof coating without conglutination of the concrete structure and rigid protective layer, and maintain the free elasticity of the waterproof layer in the flexible waterproof structure, the rolled materials (or scrip) are often used to separate them. These kind of isolative materials are called the isolating course.

2.12 *Geosynthetics*

Formed materials that are synthesized with polypropylene, polyethylene, polyester, polyamide and other organic compounds, and that have some specific functions. These materials, for example, are geomembrane, geotextile (cloth, net and sleeve), special geotechnical materials and geocomposite, etc.

2.13 *Carrier-reinforced materials*

In order to enhance the tensile strength of the waterproof coating in the flexible waterproof structure, some geosynthetics are often used the flexible coating layer to strengthen its tear-proof capability.

2.14 *"Water proofing outside the structure by coating the waterproof materials at the outer surface of the structure" and "water proofing outside the structure by coating the waterproof materials at the inner surface of the structure"*

Two methods are often used for underground waterproofing. One prevents leakage of water by coating the waterproof materials at the outer surface of the structure. The other prevents leakage of water by coating the waterproof materials at the inner surface of the structure. The former is for waterproofing the outer surface of the structure (the surface in which water tries to penetrate in) after pouring the concrete enclosure wall. The latter for erecting a supplementary wall from the ground surface before pouring the concrete of the enclosure wall, coating the waterproof materials at the inner surface of the supplementary wall and then, pouring the concrete.

2.15 *Hydration of cement*

The various inorganic salts in the cement petrify to form a chemical reaction of hydrated compounds containing crystallized water when they meet water.

2.16 *Stoning ratio*

The ratio of volume of cement slurry after solidification to the cubage of original cement slurry.

2.17 *Shield tunnel*

In a place with soft stratum, a tunnel is dug in a way of mechanization and orientation at the overall cross-section by the method of grouting waterproof materials slurry for impermeability to water, supporting the tunnel wall with pipe plate or molding by extrusion process.

2.18 *Tunnels (wall-attached type and wall-separated type)*

As for the wall-attached type of tunnel, an inner lining layer is lined at the tunnel to attach the surrounding rock closely and a blind ditch is set up at the back of the tunnel wall to drain water. As for a wall-separated type of tunnel, there is a relatively large space left between the inner lining layer to be lined at the tunnel and the surrounding rock to make it convenient for ventilation and drainage. Some tunnels have an entry and exit on its inner protective wall for workers to come in and maintain the tunnel.

2.19 Pressure grouting

This is one of the grouting methods for filling concrete cracks and resisting the seepage of water. A pump with the pressure larger than 1 MPa is used to grout waterproof materials slurry or cement slurry into a crack on the surrounding rock or concrete structure.

2.20 Leachate

It is a feculent solution made from decomposed rubbish.

3. Purpose and Mechanics of Waterproofing

Waterproofing serves many purposes, including: protecting architectural structures; guaranteeing the normal function of a structure; preventing concrete from becoming carbonized; plus reinforcing and protecting internal steel from rust and erosion due to water intrusion, corrosion, and freezing and thawing. Ultimately, **CN2000®** waterproofing prolongs the work life of structures and reduces maintenance costs.

CN2000® waterproofing products were based on specific molecular physics processes and principles from the nuclear energy industry. After studying the action force among molecules and the molecular rules of movement, the Eka-molecule sieve and active substances were discovered. **CN2000®** products have an Eka-molecule sieve structure and a permeation crystalline effect. This means the waterproof layer will not only have high breathability, ventilation, and impermeability to water, but also have high impervious pressure.

The waterproof materials are cementitious ones. Therefore, they can firmly adhere to concrete and become an integral whole. The waterproof ingredients contain active substances, which may push the lattice of silicate to produce, change, and re-crystallize. The active substances can then permeate into the surface of concrete to not only enhance the adherence of waterproof layer with the base, but also to enhance the impermeability of the base structure. When tiny cracks occur in the concrete, the silicates, aluminates and dissociated calcium oxide bases, the active materials react with water and produce new crystalline along the cracks, blocking the passages of water. Therefore, the waterproof effect is achieved.

Also when tiny cracks occur in the waterproof layer and concrete structure due to outside force, the addition of water will trigger the active substances. The lattices of the aggregate in the waterproof materials and the un-hydrated cement pastes in the concrete structure will react with the water and reproduce crystalline to plug up the tiny cracks. Thus, the waterproof materials and concrete structure can self-heal.

4. CN2000® Features and Performance Criteria

4.1 Features

4.1.1 **CN2000®** products maintain highly impervious pressure and can provide reliable security against water and corrosion. Test results from the Test Center of the Chinese Changjiang Sanxia Engineering Development General Corporation show that the secondary impervious pressure reaches 2.4 MPa.

4.1.2 **CN2000®** products have a short setting time, which can be controlled within one hour. Besides, no long-term curing period is necessary between the two coating procedures, significantly shortening the overall waterproofing project time.

4.1.3 **CN2000®** products require a short curing period. Project work can resume after a 24-hour curing process, after the last **CN2000®** application was completed. It is unnecessary to wait the customary 7-days curing period as one would when waterproofing with another product.

4.1.4 **CN2000®** products are environmentally safe without risk of toxic consumption, inhalation or any other injury to the human body or pollution to the environment. It is even safe to be used in projects involving potable water.

4.1.5 **CN2000®** products have a self-healing capability. When small cracks appear in the structure, water will trigger a chemical reaction and automatically plug up the cracks.

4.1.6 **CN2000®** products are highly resistant to salt, alkali acids, corrosion and the weather elements. In addition, they can be used in underground salt- and seawater conditions.

4.1.7 The coating layer is thin. The technological operation is simple. The use quantity of materials is economical. The application efficiency is high. The period of application for a project is short. The cooperation with other working procedures is convenient.

4.1.8 **CN2000®** products are water-soluble. They are suitable for waterproof projects at various heights and altitudes, including underground. The application can be carried out at the ambient temperature.

4.1.9 The application of the **CN2000®** products is simple and convenient. The coating layer can change according to the shape of the substrate surface. It can form a waterproof layer on the structure at site. **CN2000®** products can be used with trowel coating, brush coating and spray coating, and are suitably applied at a narrow area and on an abnormal surface.

4.1.10 **CN2000®A** can be operated in the active flow of water. **CN2000®B** can be applied at a damp structure surface.

4.2 Performances Criteria

4.2.1 **CN2000®A** quick *leakage-plugging materials*
The performances of **CN2000®A** *meet the physical mechanical requirements, prescribed in the standard "JC 900-2002 Inorganic Substance for Waterproof and Leakage Plugging Use" at type II (quick-setting) in the building materials industry. The main criteria of* **CN2000®A** *are as the follows*:

- Initial setting time: 2 ~ 10 min.
- Final setting time: ≤15 min.
- Bend strength (3 days): ≥ 4 MPa
- Compressive strength (3 days): ≥ 15 MPa
- Adhesive strength at the damp structure surface: ≥ 1.2 MPa
- Impervious pressure (7 days): > 1.5 MPa
- Resistance to heat: in 100 ☐ for 5 hours without crazing, crumpling or breaking-off to be found
- Circulation of freezing and thawing: at state -15☐~+20☐ for 20 times without crazing, crumpling or breaking-off to be found

4.2.2 **CN2000®B** rigid *waterproof materials in the capillary crystalline type*
The performances of **CN2000®B** *meet the physical mechanical requirements prescribed in the standard prescribed in the national standard "GB 18445-2001 Cementitious Capillary Crystalline Waterproofing Materials" at CII type. The main criteria of the present materials are as the follows:*

- Initial setting time: ≥ 20 min.
- Final setting time: ≤ 24 hours
- Bend strength (28 days): ≥ 3.5 MPa
- Compressive strength (28 days): ≥ 18.0 MPa
- Impervious pressure (28 days): ≥ 1.2 MPa
- Impervious pressure at the secondary time (56 days): ≥ 0.8 MPa
- Adhesive strength at the damp structure surface: ≥ 1.0 MPa
- Impervious pressure ratio (28 days): ≥ 300%.

4.2.3 **CN2000®C+D** *flexible waterproof materials in polymer and cement type*

The performances of **CN2000®C+D** *meet the physical mechanical requirements,, prescribed in the building materials industry standard "JC/T 894-2001 Polymer Modified Cementitious Waterproofing Coating." The main criteria of the present materials are as the follows:*

- Solid content: ≥ 65 %
- Touch drying time of coating layer: ≤ 4 hours
- Actual drying time of coating layer: ≤ 8 hours
- Tensile strength:
  - Without treatment: I type ≥ 1.2 MPa II type ≥ 1.8 MPa
  - Maintaining ratio after heating treatment: I type ≥ 80 % II type ≥ 80 %
  - Maintaining ratio after alkali treatment: I type ≥ 7 % II type ≥ 80 %
  - Maintaining ratio after ultraviolet radiation treatment: I type ≥ 80 % II type ≥ 80 %
- Elongation ratio at break:
  - Without treatment: I type ≥ 200 % II type ≥ 80 %
  - Heat treatment: I type ≥ 150 % II type ≥ 65 %
  - Alkali treatment: I type ≥ 140 % II type ≥ 65 %
  - Ultraviolet radiation treatment: I type ≥ 150 % II type ≥ 65 %
- Adhesive strength at the damp structure surface:
  - I type ≥ 0.5 MPa
  - II type ≥ 1.0 MPa

- Impervious strength:
  - I type - II type ≥ 0.6 MPa
- Flexibility at low temperature (☐10 mm rod):
  - I type -10 ☐ without crack to be found
  - II type ---Impermeability (30 min. and 0.3 MPa): no leakage of water to be found

4.2.4 ***Environmental Conservation*** *criteria of* **CN2000®** *series of products.*

The environmental conservation criteria of **CN2000®** *series of products are below the environmental thresholds prescribed in the standards of "GB/T 15516-1995," "HJBZ 004-1994," and "Method for Monitoring and Analyzing Water and Waste Water (Third Edition)." The criteria of these environmental thresholds are as the follows:*

Hg: 0.05 ☐g/L
Pb: 10 ☐g/L
Zn: 50 ☐g/L
Cd: 0.5 ☐g/L
Cu: 10 ☐g/L

Formaldehyde: 0.008 mg/m3Volatile organic compound (VOC): 0.01 mg/m3.

4.2.5 *Performances of the carrier reinforced materials in the flexible coating layer.*

ITEM			QUALITY REQUIREMENT		
			I	II	III
Appearance			Uniform without slug type and leveling-up without fold		
Tensile force (width 50 mm) /N	Longitudinal	≥	150	450	950
	Transverse	≥	100	35	50
Percentage of elongation/%	Longitudinal	≥	10	20	3
	Transverse	≥	20	25	3

Note: the materials of the I classification are polyester non-woven fabric cloth, the materials of the II classification are chemical fiber non-woven fabric and the materials of the III classification are fiberglass net cloth.

5. Scope of Applications

5.1 Ordinary buildings: roofs, basements, kitchens, toilets, bathrooms and walls of ordinary buildings, as well as in swimming pools and warehouses.

5.2 Hydraulic works and hydroelectric power stations: seepage prevention in the dyke and grit chamber, leak prevention in channels; and waterproofing covered ways.

5.3 Tunnels: road and rail tunnels; military bunkers and warehouses; aerial defense projects; subways, mines; and underground galleries.

5.4 Deep wells/pits: reservoirs, sewage treatment wells, underground missile launch wells, underground oil storage tanks; and underground rubbish pits.

5.5 Road surfaces: bridge surfaces; airport runways

5.6 Anticorrosion: coastal facilities; pipelines.

5.7 Renovation of waterproof project and seepage prevention by consolidation grouting
.

6. Application Conditions and Storage Requirements

6.1 **CN2000®** is best used when the substrate surface of the structure is thoroughly dry and subsidence of the structure has been at a stable state.

6.2 It is recommended that the project should be applied at the temperature of 5~35 degrees Celsius. The best temperature for application is 20 ± 10 degrees Celsius. Avoid application under 5 degrees Celsius and up 35 degrees Celsius.

6.3 Do not apply **CN2000®** during rainy weather conditions. Avoid application on overly sunny days, but if you must, use proper shielding measures and ensure adequate ventilation.

6.4 Do not store or transport **CN2000®** in damp conditions. **CN2000®** should be kept on a rack or shelf that is no lower than 300 mm from the ground surface. **CN2000®C**

should be stored at temperatures higher than 0 degrees Celsius and away from a direct sunshine.

6.5 Do not mix **CN2000®** with Portland cement and other waterproof materials. Do not attempt to mix the **CN2000®** slurry at its initial setting state with water and reuse.

7. Basic Applications and Commonly Used Formulas

7.1 Basic Application

7.1.1 The **CN2000®A** product is used for quickly plugging leaks.

7.1.2 The rigid **CN2000®B** product is used on the part of a structure that will be immersed in water for a long time.

7.1.3 The flexible **CN2000®C** + **CN2000®D** product is used on the deformation part of a structure that will not be immersed in water for a long time.

7.1.4 All of the rigid and flexible **CN2000®** products can be used for preparing waterproof mortar and waterproof concrete.

7.1.5 Additionally, the rigid waterproof materials can be used as the pressure grouting slurry, for filling cracks and plugging leaks, and consolidating the surrounding rock.

7.2 Commonly Used Formulas

7.2.1 **CN2000®A** *product for quickly plugging leaks*

- **CN2000®A** *water* = 1:0.2~0.3 with a proper quantity of fiber to be added for plugging up a larger crack.

7.2.2 **CN2000®B** *product as a waterproof coating layer*

- Trowel coating: **CN2000®B** : water = 1:0.35 ± 0.05
- Brush coating: **CN2000®B** : water = 1:0.5 ± 0.05
- Spray coating: **CN2000®B** : water = 1:0.55 ± 0.05

The **CN2000®B** product for preparing rigid waterproof mortar or waterproof pea gravel concrete:

- **CN2000®B**: medium sand (fine gravel): water = 1:1:0.4~0.5.

7.2.3 **CN2000®C** + **CN2000®D** *flexible materials as a waterproof coating layer*

- **CN2000®C** : **CN2000®D** = 1:1

CN2000®C *latex for preparing waterproof polymer cement mortar:*

- **CN2000®B**: **CN2000®C:** medium sand : water = 1:0.2:1:0.2

7.2.4 When **CN2000®B** rigid materials and **CN2000®C** + **CN2000®D** flexible materials are used in the mechanical spray coating, the formula of spray coating slurry will vary according to the difference of equipment parameters and the conditions of the substrate surface of the structure. For details, see "Technical Regulations for Spray Coating and Grouting of **CN2000®** Series of Waterproof Materials."

7.2.4 **CN2000®B**: product for impervious consolidation grouting:

- Grouting slurry at the first time: **CN2000®B**::water = 1:1.5
- Grouting slurry at the interim time: **CN2000®B**::water = 1:1
- Grouting slurry again after shrinkage: **CN2000®B**::water = 1:0.8
- Sealing leaking hole: **CN2000®B**::water = 1:0.35

Note: the formulas above can be adjusted according to the practical required conditions by means of the test results at the project site.

8. Waterproof Grades and Preparatory Work

8.1 Waterproof grades

8.1.1 Waterproof grades and requirement for setting up rooftop protection (national standard GB 50207-1994)

Waterproof Grade

Item	1st grade	2nd grade	3rd grade	4th grade
Classification of buildings	Especially important civil and industrial buildings with special waterproof requirements	Important industrial and civil buildings, high buildings	Standard industrial and civil buildings	Non-permanent buildings
Work duration of waterproof materials	25 a	15 a	10 a	5 a
Requirement of setting up defense	3 coating layers or above 3 coating layers, including a layer of waterproof coating of polymer with the thickness >2 mm	2 coating layers, including a layer of waterproof coating of polymer with the thickness at 2 mm	1 layer of waterproof coating of polymer with the thickness at 1.5 mm	1 layer of waterproof coating of polymer with the thickness at 1.0 mm

8.1.2 Waterproof grade, applicable scope and requirement of setting up defense at an underground waterproof project (national standard GB50108-2001)

Waterproof grade of underground waterproof project

Waterproof grade	Standard
1st grade	It is not allowable for water leakage to appear without a water stain forming the surface of the structure.
2nd grade	It is not allowable for water leakage to appear, but allowable for less water stain to be found at the surface of the structure. Industrial and civil buildings: the proportion between total area of water stain and total waterproof area should not be larger than 1/1000 (including roofing board, wall surface and floor surface). It is not allowable for any waterproof area of 100 m2 to have more than 1 place of water stain with a single area of water stain no larger than 0.1 m2. Other underground project: the proportion between total area of water stain and total waterproof area should not be larger than 6/1000. It is not allowable for any waterproof area of 100 m2 to have more than 4 places of water stain with a single area of water stain at maximum no larger than 0.2 m2.
3rd grade	Have a small quantity of leakage points and it is not allowable for leakage in a linear flow type and mud leakage to appear. It is not allowable for leakage to appear in excess of 7 points at any waterproof area of 100 m2 with a single water stain to have a leakage quantity no larger than 2.5 L/d at maximum and a single water stain area at maximum no larger than 0.3 m2.
4th grade	Have leakage points, but it is not allowable for leakage in a linear flow type and mud leakage to appear. The average water leakage quantity of the whole project should not be larger than 4 L/(m2·d).

a. Applicable scope of different waterproof grades

Waterproof grade	Applicable Scope
1st grade	Workplace, where people stay for a long time; warehouse, where the article may be deteriorated and go invalid as well as position, where the normal work of equipment and safe operation of project will be seriously influenced due to a small quantity of water stain; and extremely important military project.
2nd grade	Place, where people often make activities; warehouse, where the article will not be deteriorated and go invalid as well as position, where the normal work of equipment and safe operation of project will be not influenced basically, if there is a small quantity of water stain; and important military project.
3rd grade	Place, where people make activities temporarily and ordinarily military project.
4th grade	Project, where there are no strict requirements on the water leakage.

c. Requirements for setting up defense for waterproofing at an underground project

(1) Setting up defense for waterproofing at underground project by open cut method

Position of project	Main body			Construction joint	Post-cast strip		Deformation joint\induction joint	
Waterproof measures	Waterproof concrete	Waterproof mortar Waterproof roll-roofing aterial Waterproof coating Plastic waterproof board Metal sheet		Water expanded water-stop bar Water-stop bar in a middle buried type Water-stop bar in a type attached outside Waterproof mortar built outside Waterproof coating coated outside	Expansive concrete	Water expanded water-stop bar Water-stop bar in a type attached outside Waterproof caulking material	Water-stop bar in a middle buried type	Detachable water-stop bar Waterproof caulking material Waterproof roll-roofing material attached outside Waterproof coating coated outside
Waterproof grade	1st grade	Selectable	1 or 2 kinds Selectable	2 kinds Selectable	Selectable	2 kinds Selectable	Selectable	2 kinds Selectable
	2nd grade	Selectable	1 kind Selectable	1 or 2 kinds Selectable	Selectable	1 or 2 kinds Selectable	Selectable	1 or 2 kinds Selectable
	3rd grade	Selectable	1 kind Selectable	1 or 2 kinds Selectable	Selectable	Suitable for 1 or 2 kinds selectable	Selectable	Suitable for 1 or 2 kinds selectable
	4th grade	Suitable for selection	——	Suitable for 1 kind selectable	Selectable	Suitable for 1 kind selectable	Selectable	Suitable for 1 kind selectable

(2) Setting up defense for waterproofing at underground project by undercutting method

Position of Project		Main body				Construction joint of inside lining					Deformation joint\induction joint of inside lining				
Waterproof measures		Lining in a composite type	Lining and bushing in wall-separated type	Lining in wall-attached type	Ejecting concrete	Water-stop bar in a type attached outside	Water expanded water-stop bar	Waterproof caulking material	Water-stop bar in a middle buried type	Waterproof coating coated outside	Water-stop bar in a middle buried type	Water-stop bar in a type attached outside	detachable Water-stop bar	Waterproof caulking material	Water expanded water-stop bar
Waterproof Grade	1st grade	1 kind Selectable			—	2 kinds Selectable					Selectable	2 kinds Selectable			
	2nd grade	1 kind Selectable				1 or 2 kinds Selectable					Selectable	1 or 2 kinds Selectable			
	3rd grade	—		1 kind Selectable		Suitable for 1 or 2 kinds selectable					Selectable	Suitable for 1 kind selectable			
	4th grade			1 kind Selectable		Suitable for 1 kind selectable					Selectable	Suitable for 1 kind selectable			

Note: CN2000® series of waterproof materials can be used in the underground projects by open cut method and by undercutting method at the inner and outer surface of the main structures as well as the outer surface of joint seams. Generally, the rigid coating layer of the present materials has a thickness of 1.5 mm, the flexible coating layer of the present materials has a thickness of 1.5 ~ 2 mm and waterproof mortar layer has a thickness of 10 ~ 20 mm, when they are used.

8.2 Investigations and Design on Waterproof Construction

8.2.1 Content of the investigation at site

- **a.** The project construction condition at site, including the conditions of water supply and drainage, electricity and road;
- **b.** The classification of buildings and structures, their waterproof grades and features;
- **c.** The water source, water level (pressure), flow rate and influence of corrosion;
- **d.** The classification, workload and quality standard of waterproof construction; and
- **e.** The work and living conditions to be provided by the owner of the project.

8.2.2 *Design principle of the waterproof construction*

a. A meeting should be held by the parties concerned to exchange the ideas about project construction and to determine the preliminary scheme for the project construction together.
b. The relative information and data should be analyzed and studied with the technique and cost to be estimated carefully.
c. The principle of "waterproofing in combination of draining water" should be implemented by considering discharge of water properly prior to treating leakage.
d. The waterproof and sealing materials should be chosen according to waterproof grade and relative requirements. Then, the practical scheme for the project construction is determined.
e. As for the part of structure, if it is immersed in water for a long time, the rigid waterproof materials will be used. If it is not immersed in water for a long-time, but with displacement, the structure requires the use of flexible waterproof materials. As for the part for structure, where it is necessary to be covered with a rigid and flexible composite waterproof layer, rigid waterproof materials must be coated first and then, the flexible waterproof materials are layered on top The periphery of this part must be tightly sealed with a covering layer to prevent the flexible waterproof materials from swelling, when it meets with water.
f. The waterproof work should be done on the part of structure that will face the water penetration. The waterproof materials must be closely stuck on the part of structure.

The waterproof structure should be simplified rationally so as to facilitate the construction and maintenance on the project.

***8.2.3**. Basic content of design of waterproof construction*

a. The survey of the project: the name of the project, geographic position, traffic condition, water and electric supply, floor area and waterproof area, waterproof grade and requirement of setting up defense, workload of additional project, construction duration and project investment, etc.
b. The integral arrangement and waterproof construction scheme: including how to utilize the existing condition to effectively treat the waterproofing and draining water, the classification and workload of the project in the aspect of waterproofing and draining water as well as the key point about work to be done on waterproofing.
c. The selection of equipment and materials to be used: the name, quantity and performance of the equipments and materials, the manufacturer of the equipments and materials, the installation and storage of equipments and materials as well as the test arrangement at site, etc.
d. The construction process: drawing up the detailed diagrams at the key point of the structure for the waterproof construction, defining operation method and requirements of the quality inspection.
e. The project construction schedule and labor organization: the project construction sequence to be arranged based on the requirements of project start and completion date, fixed in the relative contract, the work efficiency and materials exhaustion to be estimated objectively, man power and materials resources to be prepared enough, a complete set of management regulations and quality guaranteed system to be set up at site as well as the project construction schedule and sequence to be indicated in a form of diagram and table clearly.
f. The budget of the cost: including 4 parts of the direct cost (equipments, materials, labor and other expenses to incur directly), indirect cost (management expense, transport expense, temporary building cost, labors' insurance premium), statutory profit and taxation (business tax and additional tax of urban construction and education), which should be made in reference to budget ration, prescribed in the province or city, where the project is located.
g. The measures to be taken for labors' protection and against accident to occur.
h. The standard of quality inspection and content and method to be used in acceptance of the constructed project.
i. The appendix: the referred information and data to be used in project design.

8.3 project application tools and substrate surface treatment

8.3.1 The project construction tools: scrapper board, trowel, rolling brush, high pressure water ejector, sprayer, corner grinder, metering device, stirrer, special nylon brush, palm fiber brush with the hardness at the middle extent, steel wire brush, chisel, hammer, broom, dishcloth and rubber gloves.

8.3.2. The substrate surface treatment: the dirty matters, including organic substance, paint, oil dirt and other adhesive matters, should be cleaned away from the surface of concrete. A crack larger than 1.0 mm should be necessarily cut into a groove in U shape at the size of 15-mm×20 mm (or 20 mm×30 mm) and brushed with steel wire brush. The coarse surface of the concrete should be cleaned with high-pressure water ejector (or 5% HCl solution). It is not allowable for the suspended matters and residues to be left on the cleaned base surface of concrete.

9. Waterproof structure and requirements of the different methods to be used in the project construction

9.1. Water proofing by the surface coating layer

9.1.1. A complete structure of surface coating layer at the high grade for water proofing includes 4 parts of base layer of structure, leveling course, sloping course, waterproof coating layer (as for the flexible waterproof coating, it should also include upper and lower isolating course and carrier reinforced materials layer) and surface protection layer.

The waterproof structure at the outer layer of deformation joint includes 4 parts of laying materials, sealing materials (containing water-stop strip and water-stop bar), isolative materials and surface protection layer. As for the waterproof project below the II grade, the waterproof structure can be simplified according to the practical condition so as to speed up the progress of project construction and reduce the cost.

9.1.2. Generally, the structural strength at the structure base layer is not smaller than C15. If the spray coating method is used in the project construction, its strength requirements can vary according to the situation. However, there must be no visible water, suspended sand, and oil dirt at the base surface with the smooth surface to be hacked.

9.1.3. A leveling course should be set up according to the waterproof grade and actual requirements. The requirements on the leveling course should be based on the GB 50207-1994 standard. The construction of the waterproof layer can only be conducted 7 days after curing on the leveling course according to conventional practice.

9.1.4. The rigid waterproof materials are used at the steady structure and flexible waterproof materials are used at the elastic structure. In the construction of waterproof project at the I and II grades, the coating of 1.5 ~ 2 mm thick can

be used as one of the 2 ~ 3 waterproof layers in the measures to be taken. In the construction of waterproof project at the III and IV grades, such a coating can be used as rigid or flexible waterproof layer independently with the thickness larger than 0.8 mm. If a rigid and flexible composite coating is used, the thickness of each coating should not be smaller than 1 mm. When the carrier-reinforced materials are added in the flexible coating, the upper and lower coatings should have a thickness no less than 0.8 mm. As for the connection of the reinforced materials, their long edge should not be shorter than 50 mm and their short edge should not be smaller than 70 mm.

9.1.5. When the **CN2000®**: slurry is prepared, water must be poured first and **CN2000®**: is added while stirring simultaneously. After the materials have been added, the mixture should be mechanically stirred for at least 3 minutes. The slurry should be used while it is in a state without powder masses and air bubbles. When the trowel coating, brush coating or spray coating process is used, the principle of "coating in a thin layer but at many times" should be followed. The thickness of the coating to be coated each time should not be larger than 0.5 mm with the part of structure to be coated 2 times at least in an across way transversely and longitudinally. When the next coating is coated, it should be done after the final setting of the previous layer. The connection part of the coatings should be staggered with each other in a ladder shape with the part at the corner to be thickened. In order to prevent the part at the corner from crazing in the rigid coating layer, an additional flexible waterproof coating, made from the carrier reinforced materials in a form of strip or belt (250 mm wide and 1 ~ 2 mm thick), can be coated at that part, if necessary.

9.1.6. *The* protective layer of waterproof coating can be set up according to the waterproof grade and practical need by use of cement mortar, pea gravel concrete, precast concrete block or other loose materials. The thickness of the protective layer: roofing board 20 mm, bottom board 20 ~ 40 mm and vertical wall 15 mm. When the flexible coating is used as the waterproof coating at the lower part, an isolative layer is laid down between the integral rigid protective layer and flexible waterproof coating according to the practical need.

9.1.7. Users should punctually sprinkle water on or covering film over the rigid waterproof coating to cure it, leveling course with cement mortar and protective layer according to the relative requirements after their final setting, judging from that it is no longer sticky to the touch.

As for the flexible coating, it should be dried by air naturally with no necessity to rinse water or shield it. The cement mortar layer and pea gravel concrete layer should be pressed smoothly at the second time after their shrinkage.

9.2 mechanical spray coating

9.2.1. **CN2000®B** and **CN2000®C:** + **CN2000®D**: products can be applied by the method of mechanical spray coating at the vault of the tunnel, scraggly substrate surface or corner of the structure to play a special role in the project construction. As for the practical method to be used, see "Technical Regulations for Spray Coating and Grouting of the **CN2000®**: Series of Waterproof Materials."

9.2.2. When the method of mechanical spray coating is used, it is required that the substrate surface of the structure is steady without suspended sand and oil dirt on it. Before the spray coating, the substrate surface should be dampened.

9.2.3. The diameter of mechanical ejection nozzle, ejection pressure, width and distance should be adaptive to the specific gravity and viscosity of the ejected slurry solution. All of these should be adjusted well through a test before starting ejection, allowing the fluid jet to be spread out at a fog state and to prevent the fluid jet from flowing and hanging up together at a column state.

9.2.4. When the **CN2000®**: slurry solution is ejected upward to the top of a tunnel, roof of a structure or straightly to the vertical wall and a serious flowing and hanging up together at

If a serious flowing or hanging pattern appears when applying a **CN2000®**: slurry solution to the top a a tunnel, rooftop of a structure, or even a vertical wall, it is necessary to apply the rapid setting admixture solution (at the concentration ratio of 1% ~ 3%) to the substrate surface first and then, apply the **CN2000®**: slurry solution punctually to quicken the concretion.

9.2.5. The waterproof materials slurry solution is applied according to the connecting direction of each application width (application breadth) in the sequence of applying the waterproof materials slurry solution to the upper part of structure first and then, low part and edged and corner part first and then, middle part. The application of waterproof materials slurry solution should be made one time immediately after the other uniformly onto the substrate surface without any blank to be left.

9.2.6. The coating layer to be applied at 0.5 mm thickness each time. After the first layer dries, the substrate surface of structure should be at least twice to create a total thickness of 1~2 mm.

9.3 Waterproof mortar

9.3.1. The waterproof mortar is used at the part, where there are strict requirements on the strength, such as the waterproof projects of water tank, deep well, cave entry and exit and dike.

9.3.2. The substrate surface of structure, which is covered with the waterproof mortar, is not required to be very even. However, such a structure should be steady without suspended or oil dirt on it. Before the substrate surface above is coated, water should be sprinkled on it to make it wet.

9.3.3. The waterproof mortar should be laid down in different layers at a thickness of 5 mm each. After the first layer has absorbed water and has been compacted tightly, the second layer is laid down and then, the third layer.

9.3.4. The thicker the layer of waterproof mortar is, the larger the shrinkage rate is. Therefore, a divisional joint must be set up independently. When a project is constructed at a large area, the curing should be conducted immediately afterward by sprinkling water on it and the divisional joint should be filled with the sealing materials afterwards.

9.4 pressure grouting

9.4.1. Pressure grouting is used for filling crack, consolidating surrounding rock, sealing joint seam and building up impervious diaphragm wall. The pressure grouting is done according to the method, prescribed in the "SL62-1994 Construction specification of cement grouting used for hydraulic structures."

9.4.2. As for the consolidation grouting, curtain grouting, joint grouting, backfill grouting, the grouting holes should be arranged on the path of the main crack. Water should be pressed in first, and then the **CN2000®** slurry to be grouted.

9.4.3. **CN2000®B** product is used for pressure grouting. There must be 3 formulas for the grouting slurry of the waterproof materials. They are the diluted slurry (the ratio between water and **CN2000®B** at 1.5), the slurry at the concentration of middle extent (the ratio between water and **CN2000®B** at 1) and the concentrated slurry (the ratio between water and **CN2000®B** at 0.8). The slurry is grouted one after the other from the diluted one to the concentrated one gradually.

9.4.4. The method of "double-pipe and double-valve" grouting is used for the curtain grouting. Such slurry is grouted in the order of the external part at the periphery and then, at the middle part and at the deep position and then, at the shallow position. The grouting holes to be drilled should have a distance of 6~10 m from each other. A drilled hole less than 10 m deep can be completed one at a time.

9.4.5. As for the grouting slurry at the broken stratum, the orifice must be sealed first to prevent the grouted slurry from flowing out. The slurry should be grouted into the hole, separated from the one adjacent the other, to prevent the cracks from reaching each other.

9.4.6. If the slurry grouting rate is smaller than 0.4 L/min into the diaphragm wall under the fixed pressure, the curtain grouting can be stopped and the grouting hole can be sealed. If the slurry grouting rate is smaller than 0.4 L/min successively in 30 minutes under the fixed pressure, the consolidation grouting can be stopped and the grouting hole can be sealed.

9.4.7. The waterproof mortar (ratio between water and **CN2000®B** at 0.5) to be used for sealing the hole orifice is led into the hole from the orifice, then the orifice tube can be cut off and a pile should be erected, numbered and filed.

10. Waterproof Construction, and the Detailed Structure of a Typical Project

The detailed structural diagrams provided in the present regulations are aimed at stressing the application method of the present materials, but for reference only. If they conflict with the relative standards of the state, the later should be the governing ones.

10.1 Waterproof Roofing Project

10.1.1. Key Point of the Project Design and Construction

a. The flexible and rigid **CN2000®** materials are used for a rooftop waterproofing project. The thickness of coating layer will vary according to the difference of waterproof grades. As for the standard of the leveling course and protective layer, see the section 9.1 "water proofing by the surface coating layer."

b. The gutter, rain gutter, cornice, flashing, parapet wall and slot are considered the key points of the waterproof project. At these places, an additional flexible coating layer should be made with the carrier reinforced materials of a proper width (wider than 250 mm generally) to be laid down in the layer. The part, connecting the water outlet and roofing should be sealed tightly with an additional waterproof layer to be coated, in which 2 layers of carrier reinforced materials are laid down. What is more, the coating layer should extend 50 mm at least into the water outlet. As for the waterproof method at the deformation joint, see the section 10.5 "sealing of structural deformation joint."

c. The drainage slope on the roof: there should be a slope of 3% on the structure, 2% made by use of materials and 1% at the gutter with the falling head no larger than 200 mm from the top to down. The collecting pipe of the roof flashing should be installed one piece per 100 m2 roofing area and the vertical pipe should be installed at a distance no larger than 10 m with each other.

d. The slope for dispersing water on the ground surface should be made at 5% with the elevation 50 mm high above ground surface and width wider than the backfilled earth in the foundation pit.

10.1.2. As for the detailed waterproof structure see the diagrams 10.1–1 to 10.1–9.

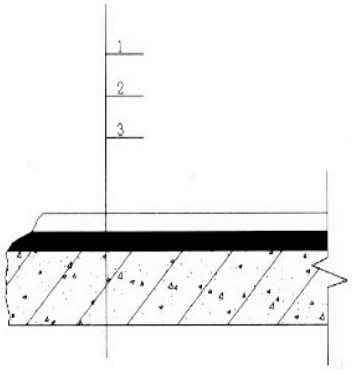

Diagram 10.1–1 light roof of concrete
1- protective layer; 2- ZHONGHE 2000 waterproof coating; 3- structural floor

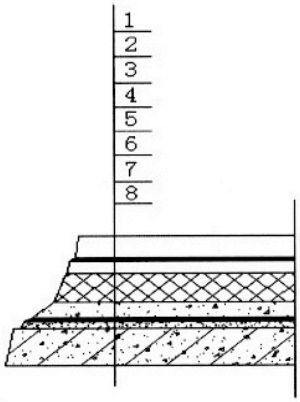

Diagram 10.1–2 thermal insulating roof of concrete
1- protective layer; 2- ZHONGHE 2000 waterproo coating; 3- leveling course; 4- thermal insulating layer; 5 laid to falls; 6- water vapor retarder; 8- structural floor

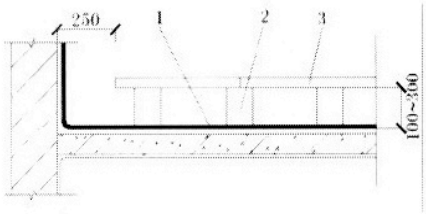

Diagram 10.1–3 ventilated thermal insulating roof
1-ZHONGHE 2000 waterproof coating; 2- support; 3- ventilated double roofing

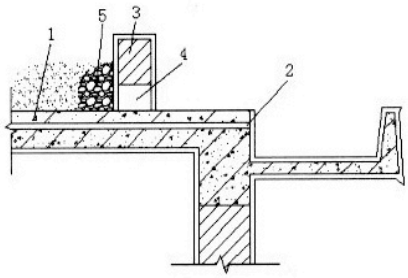

Diagram 10.1–4 planting roof
1- ZHONGHE 2000 waterproof coating; 2- sealing material; 3- brick stopping; 4- weep hole; 5- planting soil

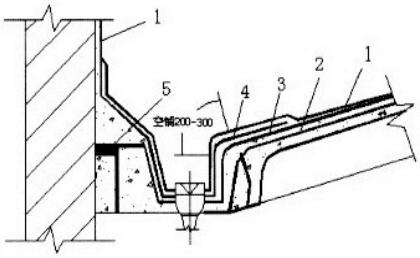

Diagram 10.1–5 valley
1- waterproof coating with rigid and flexible composite waterproof materials; 2- carrier reinforced layer; 3- leveling course; 4- raised isolating course; 5- seal of joint seam

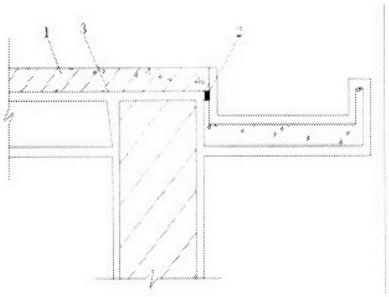

Diagram 10.1–6 roof gutter drip
1- ZHONGHE 2000 waterproof coating; 2- sealing material; 3- isolating course

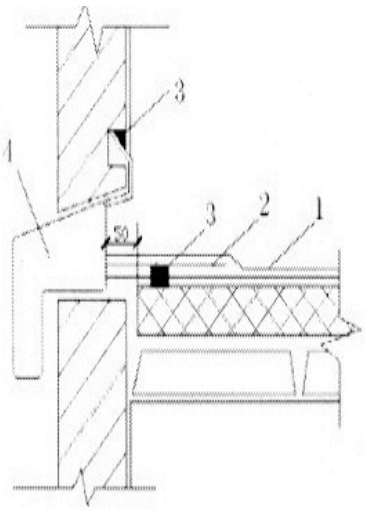

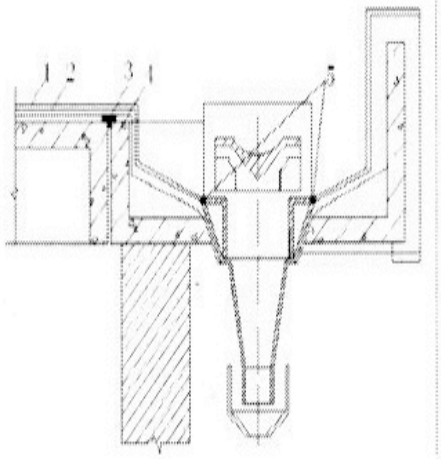

Diagram 10.1–7 lateral and vertical water outlet (a) (b)

(a) lateral water outlet
1- ZHONGHE 2000 waterproof coating; 2- reinforced layer; 3- sealing material; 4- water outlet socket

(b) vertical water outlet
1- ZHONGHE 2000 waterproof coating; 2- isolating course; 3- sealing material; 4- concrete packing washer; 5- sealing compound

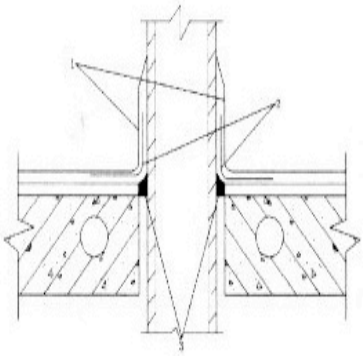

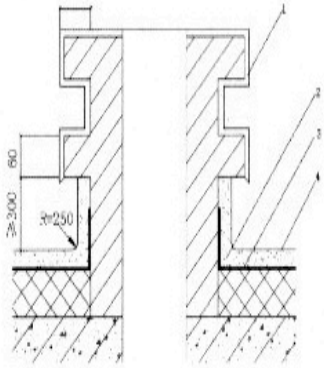

Diagram 10.1–8 waterproof construction of pipe through roof
1- ZHONGHE 2000 waterproof coating; 2- reinforced layer; 3- sealing compound

Diagram 10.1–9 waterproof construction of chimney air-way through roof
1- protective layer; 2- cinder concrete; 3-ZHONGHE 2000 waterproof coating; 4- protective layer

10.2 Basement waterproof project

10.2.1 Key point of project design and construction

a. **CN2000®B** product or rigid and flexible composite materials are used for basement waterproofing. The waterproof coating should have a thickness, reaching 1.5 ~ 2.5 mm according to the waterproof grade. When using only **CN2000®B** at the open and dark corners of the joint seam between the floor and enclosure wall, an additional flexible coating layer with carrier reinforced materials wider than 250 mm and thicker than 2 mm should be laid down at the corner. The joint at the corner between the floor and enclosure wall must be sealed tightly.

b. As for the waterproof structure requirements at the main body of the basement and joint seam, see the section 8.1.2 "Waterproof Grade, Applicable Scope and Requirement of Setting up Defense at the Underground Waterproof Project". A water ring or a sealing device with the replaceable sealing materials should be mounted at the pipe, which goes through the wall.

c. Waterproofing the floor and enclosure wall of the basement shall be conducted by either method of "waterproofing outside the structure by coating the waterproof materials at the outer surface of the structure" or "waterproofing outside the structure by coating the waterproof materials at the inner surface of the structure." The backfilled earth near the enclosure wall should be covered with clay at a thickness over 0.5 m and tamped tightly. The waterproof coating layer at the floor should be thickened properly and the waterproof coating layer at the enclosure wall should be made 0.5 m higher than the ground surface.

d. The slope for discharging water at the wall base of the ground surface should be greater than 5 degrees with the width wider than that of the backfilled earth.

10.2.2 as for the detailed waterproof structure, see the diagrams 10.2–1 to 10.2–4.

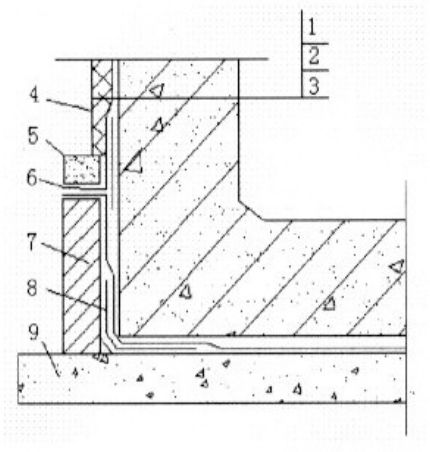

Diagram 10.2–1 water proofing outside the structure by coating the waterproof materials at the outer surface of the structure for basement

1- structure of wall body; 2- ZHONGHE 2000 waterproof coating; 3- protective coating; 4- reinforcement layer; 5- protective coating; 6- overlapping part; 7- permanent protective wall; 8- reinforcement layer; 9- concrete bedding course

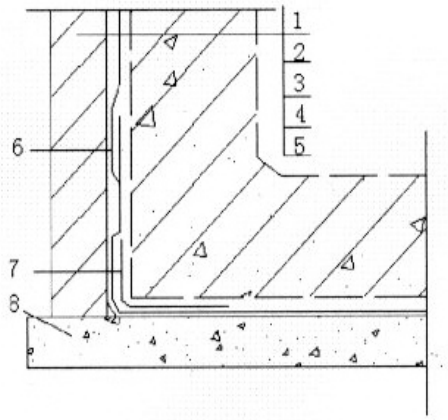

Diagram 10.2–2 water proofing outside the structure by coating the waterproof materials at the inner surface of the structure for basement

1- protective layer; 2- mortar protective coating; 3-ZHONGHE 2000 waterproof coating; 4- mortar leveling course; 5- protective wall; 6- reinforcement layer; 7- reinforcement layer; 8- concrete bedding course

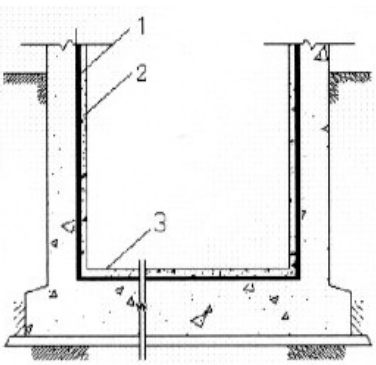

Diagram 10.2–3 preventing leakage inner the structure for basement

1- ZHONGHE 2000 waterproof coating; 2- protective layer by mortar or veneer brick; 3- protective layer by pea gravel concrete

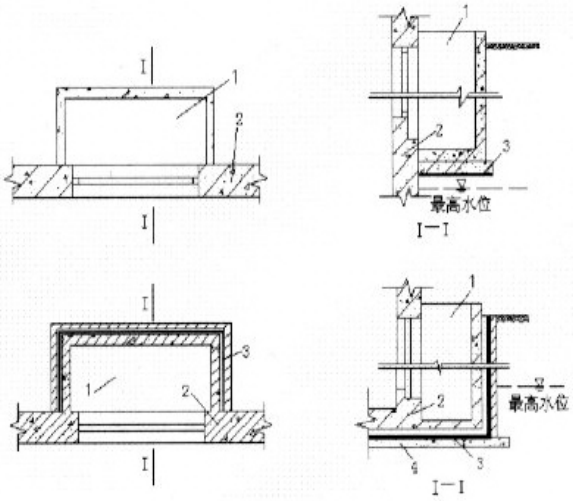

Diagram 10.2–4 waterproof structure for basement light well

1- areaway; 2- main structure; 3- ZHONGHE 2000 waterproof coating; 4- bedding course

10.3 Kitchen/toilet/bathroom waterproof project

10.3.1 Key point of project design and construction

a. The floor and wall of kitchen, toilet and bathroom are coated with a layer of **CN2000®B** 1~1.5 mm thick (no thinner than 0.8 mm at the thinnest position) with the waterproof layer at the enclosure wall around higher than 1.5 m. An additional flexible coating layer wider than 250 mm and 2 mm thick, sandwiched between carrier reinforced materials, should be applied outside the **CN2000®B** layer around the joint seam and corner of the enclosure wall, the sanitary equipment and floor drain, and the front and rear side of pipe through the wall and drainage flume. Afterward, the decorative and protective layer should be applied, while sealing the inner joint according to the waterproof grade and practical requirements.

b. The floor surface at the kitchen, toilet and bathroom should be 20 mm lower than that around it. The floor surface should have a slope greater than 2% towards the floor drain. The drainage slope around the floor drain within the range of 50 mm should be at: 3% ~ 5 %.

10.3.2 As for the detailed waterproof structure, see the diagrams 10.3–1 to 10.3–4.

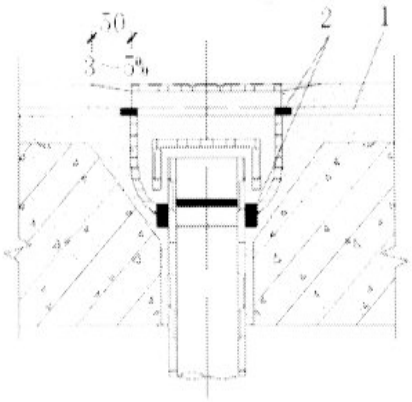

Diagram 10.3–1 section of floor drain
1- ZHONGHE 2000 waterproof coating; 2- sealing material

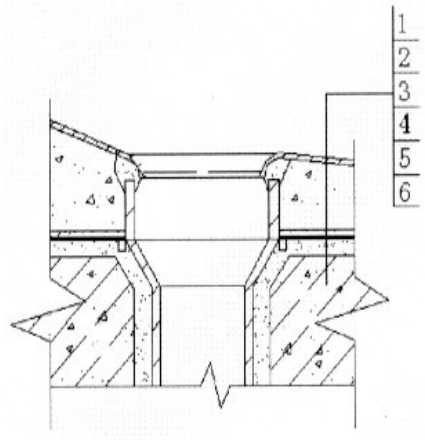

Diagram 10.3–2 section of squatting w. c. pan
1- bottom of w. c. pan; 2- bedding course; 3- protective layer by cement mortar; 4- ZHONGHE 2000 waterproof coating; 5- leveling course by cement mortar; 6- structural floor of floor slab

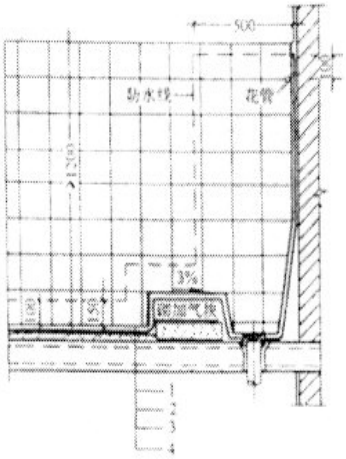

Diagram 10.3–3 section of trough urinal
1- surface course material; 2- ZHONGHE 2000 waterproof coating; 3- leveling course by cement mortar; 4- structural floor

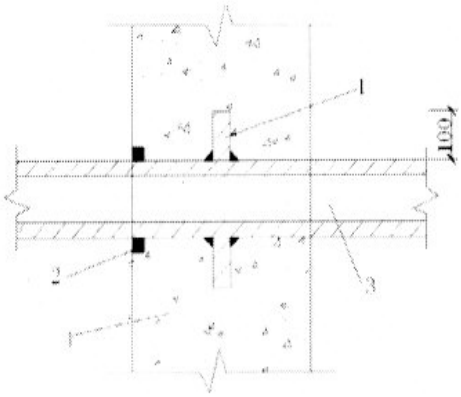

Diagram 10.3–4 fixed through-wall pipe
1- seal ring; 2- sealing compound; 3- main duct; 4-enclosure wall

10.4 Waterproofing a vertical wall

10.4.1 Key point of project design and construction

a. It is easy for parts of an underground wall, including the retention wall, continuous foundation wall, underground cast-in situ pile, to erode due to underground water. Thus, waterproof concrete should be applied to them. The key point of this type of waterproof project is the contact surface between the foundation and the floor of the building. They should be separated by use of a layer of **CN2000®B** at a thickness of 2 mm or rigid and flexible materials (sandwiched with carrier reinforced materials) to prevent the underground water from coming up.

b. It is easy for the wall above ground surface, including enclosure wall, bearing wall and parapet wall, etc., to be eroded by rainwater. The key point of this type of waterproof project is the top of wall and the protruding and sunken position of the wall body. Besides, the contact surface between the wall body and underground wall base is also easily eroded by above ground water. It should be protected by **CN2000®B** or rigid and flexible composite materials at a layer of 1.5 mm thick.

c. The underground impervious wall should be built up using rigid waterproof mortar. If a large cavern or crevice is found, it should be filled full with fine stone and coarse sand, and then, the impervious consolidation mortar is grouted.

10.4.2 As for the detailed waterproof structure, see the diagrams 10.4–1 to 10.4–7.

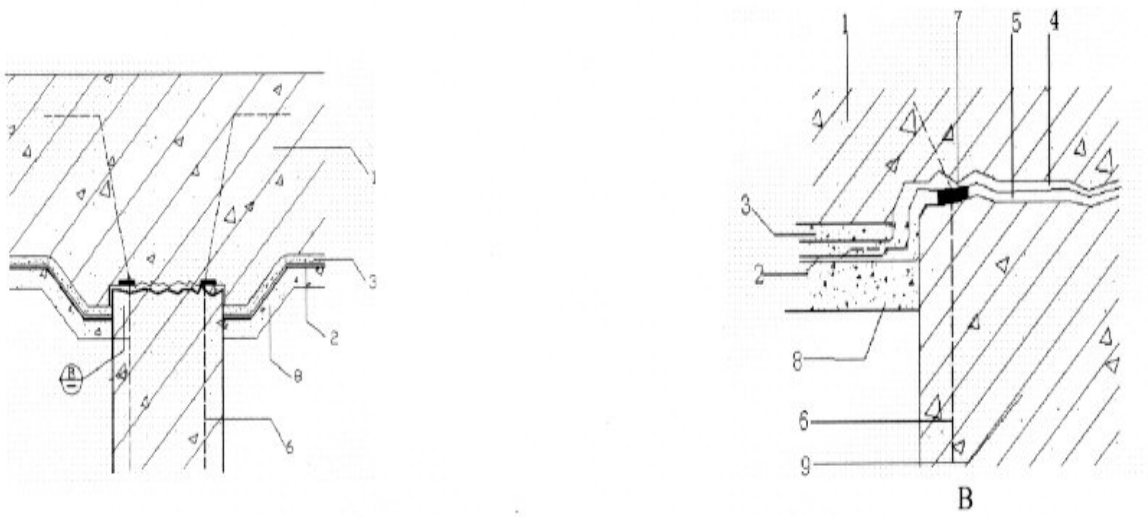

Diagram 10.4–1 waterproof structure of pile head of cast-in situ pile for underground foundation
1- base plate of structure; 2- ZHONGHE 2000 waterproof coating; 3- protective layer by pea gravel concrete; 4- polymer cement waterproof mortar; 5- CN2000C+D flexible waterproof coating; 6- load-bearing bar of pile foundation; 7- water expanded water-stop bar dilatable in contact with water; 8- concrete bedding course; 9- pile foundation concrete

Diagram 10.4–2 waterproof structure of wall top (a) (b)

(a) building material coping
1- drip; 2- protective coating; 3- concrete coping; 4- ZHONGHE 2000 waterproof coating

(b) metal plate capping
1- stainless steel coping; 2- metal fitting; 3- ZHONGHE 2000 waterproof coating; 4- finish coat; 5- sealing glue

Diagram 10.4–3 waterproof structure of inside corner (a) (b)

(a)
1- leveling course; 2- CN2000C+D flexible waterproof coating; 3- reinforcement layer; 4- thermal insulating layer; 5- protective layer

(b)
1- isolating course; 2- ZHONGHE 2000 waterproof coating; 3- sealing material; 4- reinforcement layer; 5- thermal insulating layer; 6- finish coat; 7- backing material

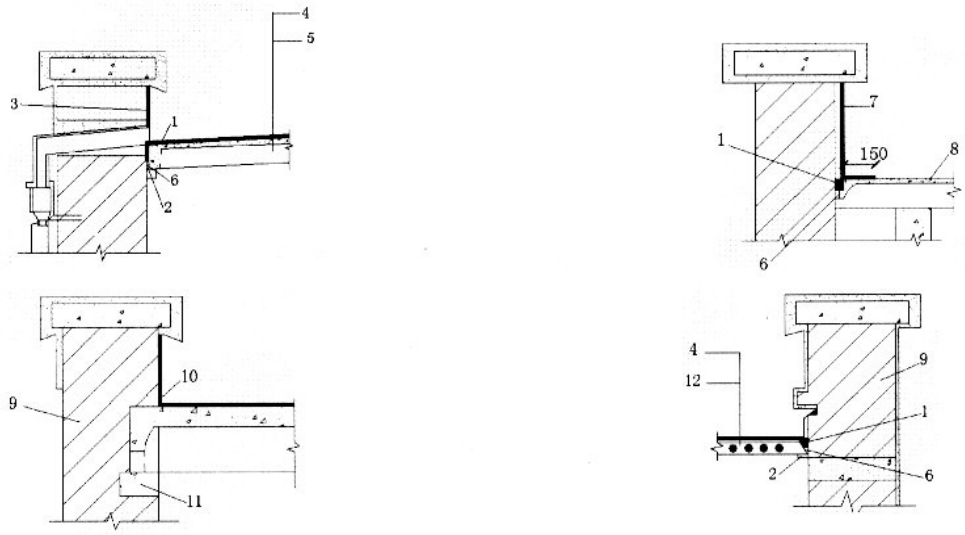

Diagram 10.4–4 waterproof structure of gable wall, parapet wall

1- joint grouting with daub; 2- hanger plate; 3- daub tamping; 4- ZHONGHE 2000 waterproof coating; 5- precast reinforced concrete roof slab; 6- pea gravel concrete; 7- daub concrete; 8- self-waterproof roof slab; 9- brick masonry; 10- local thickening layer with daub; 11- beam pad; 12- local structure

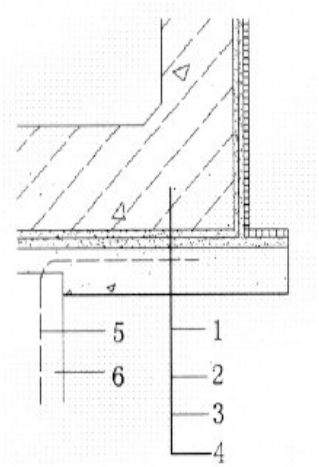

Diagram 10.4–5 waterproof structure of base plate

1- base plate of main structure; 2- protective layer by pea gravel concrete; 3-ZHONGHE 2000 waterproof coating; 4- concrete bedding course; 5-reinforcing bar of pile foundation; 6- pile foundation

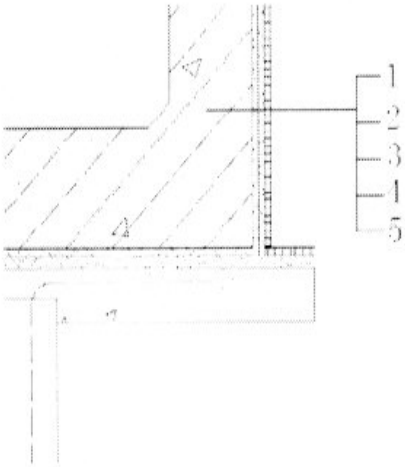

Diagram 10.4–6 waterproof structure of wall

1- external wall of main structure; 2- leveling course by cement mortar; 3- ZHONGHE 2000 waterproof coating; 4- protective layer; 5- lime earth rammed

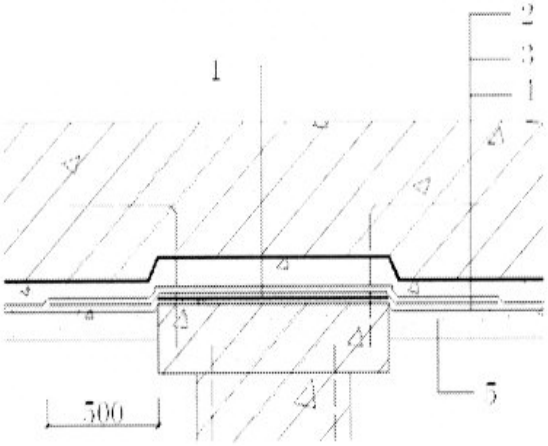

Diagram 10.4–7 waterproof structure of pile foundation with pile cap

1- ZHONGHE 2000 waterproof coating; 2- base plate of main structure; 3- protective layer with fine aggregate concrete; 4-ZHONGHE 2000 waterproof coating; 5- concrete bedding cushion

10.5 Sealing a structural deformation joint

10.5.1 Key point of project design and construction

a. When selecting the waterproofing method and materials for the structural joint, first distinguish whether such a joint is an active one or inactive one. Then, the special sealing materials are chosen for use in reference to the section 8.1.2 "waterproof grade, applicable scope and requirement of setting up defense at the underground waterproof project" and according to the position of the project. If it is an active joint, flexible materials are used, and if it is an inactive joint, rigid materials are applied. The inner joint seam should be sealed well during the construction of the structure and the sealing of the outer joint seam should be done during the waterproofing project.

b. Generally, the expansion joint, settlement joint, seismic joint and initiation joint are the active seam. In addition to sealing the joint of this kind with a rubber water-stop bar or sealing materials at the inner side of the joint, a water-stop strip in a type attached outside should be stuck at the outer side of the joint or a flexible coating layer with carrier reinforced materials in it should be used to cover the joint. As for the deeply structural joint, the plastic joint fillet or bentonite waterproof board will be used to fill in the joint. The construction joint and post-casting joint are the inactive ones. They should be sealed using waterproof mortar or pea gravel concrete.

c. As for the structural floor slab joint at the roofing surface, it should be filled with back-up materials with the rubber sealing materials to be inserted extensively 10 mm up to the open position of the joint. Besides, the sealing materials are covered with a waterproof layer of flexible coating (sandwiched with carrier reinforced materials in it). The flexible coating layer should have a covered width at the two edges of the joint. no smaller than 250 mm and an outer protective layer by mortar can be added, if necessary.

d. As for the underground project of joint seam, it should be done according to the section 8.1.2 "setting up defense for water proofing at the underground project by open cut method and by undercutting method".

e. The part of joint seam sealing and protective layer should have an exposed height of 20 mm higher than that of waterproof layer around to facilitate the maintenance easily.

10.5.2 As for the detailed waterproof structure, see the diagrams 10.5–1 to 10.5–12.

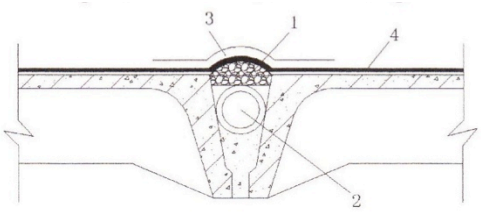

Diagram 10.5–1 waterproof structure of slab joint
1- sealing material; 2- backing material; 3- protective layer 4- ZHONGHE 2000 waterproof coating

Diagram 10.5–2 waterproof structure of slab joint
1- ZHONGHE 2000 waterproof coating; 2- sealing material; 3- backing material;
4- ZHONGHE 2000 waterproof coating; 5- isolating course; 6- pea gravel concrete

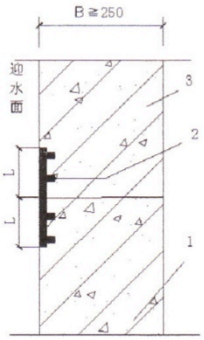

Diagram 10.5–3 waterproof structure of construction joint
basic structure of external water-stop strip
external water-stop strip L、U+2267150,
external waterproof coating L=200,
external waterproof mortar L=200
1- earlier cast concrete; 2- external water-stop strip; 3- later cast concrete

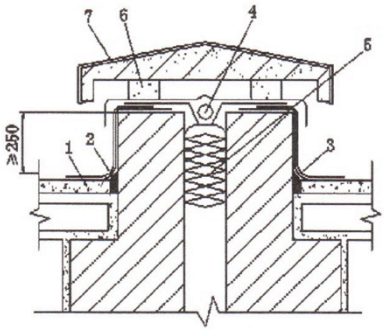

Diagram 10.5–4 waterproof structure of deformation joint
1- ZHONGHE 2000 waterproof coating; 2- sealing material; 3- CN2000C+D flexible waterproof coating; 4- lining material; 5- asphalt hemp; 6- cement mortar; 7- concrete cover plate

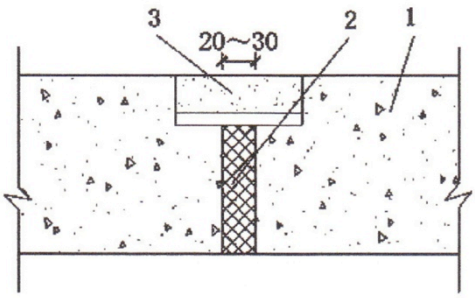

Diagram 10.5–5 caulking joint type deformation joint
1- building envelope; 2- crack filler;
3- waterproof sealant

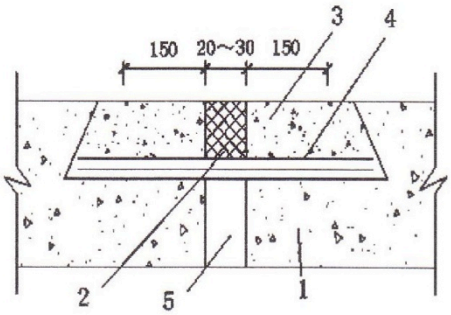

Diagram 10.5–6 deformation joint with gluing type water-stop strip
1- building envelope; 2- crack filler; 3- pea gravel concrete; 4- rubber sheet; 5- waterproof sealant

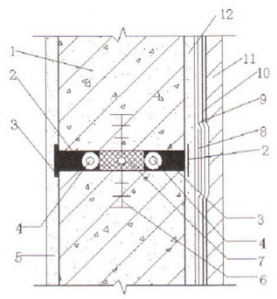

Diagram 10.5–8 deformation joint of wall
1- structure wall; 2- isolation strip; 3- sealing material; 4- back-up material; 5- cement mortar surface course; 6- rubber type or plastic type water-stop strip; 7- crack filler; 8- waterproof reinforced layer; 9- ZHONGHE 2000 waterproof coating; 10- protective layer; 11- protective layer; 12- leveling course by cement mortar

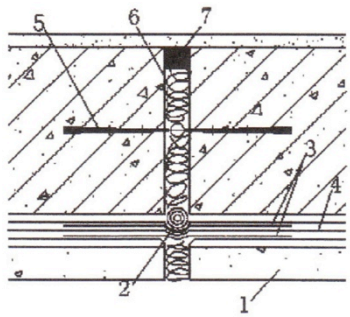

Diagram 10.5–9 deformation joint of base plate
1- bedding cushion; 2- rubber drum; 3- waterproof reinforced layer; 4- ZHONGHE 2000 waterproof coating; 5- water-stop strip; 6- wood wool slab soaked emulsified asphalt; 7- polyvinyl chloride daub

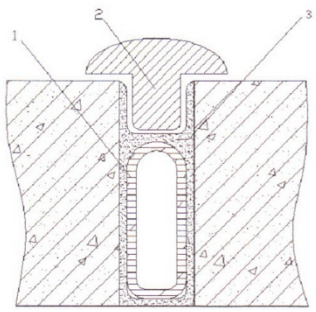

Diagram 10.5–10 expansion joint
1- rubber pipe; 2- cap of expansion joint; 3- CN2000C+D flexible waterproof coating

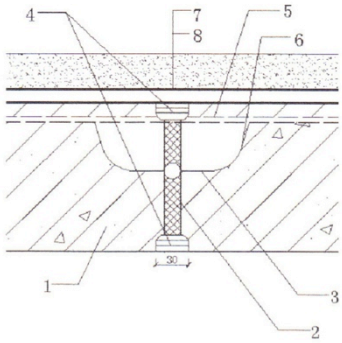

Diagram 10.5–11 deformation joint of top plate
1- top plate; 2- polyvinyl chloride foam plate; 3- rubber water-stop strip; 4- caulk; 5- load-bearing bar of structure; 6- hanging bar water-stop strip; 7- protective layer; 8-ZHONGHE 2000 waterproof coating

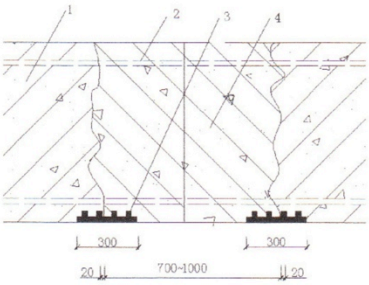

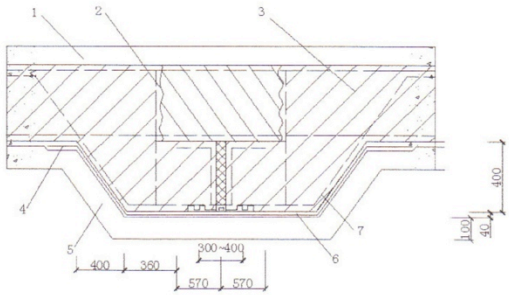

Diagram 10.5–12 waterproof structure of post-cast strip (a) (b))

(a)
1- cast-in-place concrete; 2- main reinforcement; 3- outside gluing type water-stop strip; 4- post-cast expansive concrete

(b)
1- protective layer; 2- fast and easy closing up steel wire mesh; 3- base plate; 4- ZHONGHE 2000 waterproof coating; 5- bedding cushion; 6- protective layer by pea gravel concrete;

10.6 Waterproofing a water pool, deep well or landfill

10.6.1 Key point of project design and construction

a. The key points for waterproof project at the water pool is the part of the contact surface between the pool bottom and pool wall as well as the part around the water inlet and outlet of the pipe. Beyond the requirements on seepage prevention, the chemical reaction pool and cesspool should be protected against corrosion. The deeper the pool is, the stricter the requirements are.

The requirements on the impervious pressure: depth of water = 3 m, no smaller than 0.4 MPa; depth of water = 6 m, no smaller than 0.8 MPa. If there is a high underground water level at the location of the pool, the inner and outer surfaces of the pool should be covered with the waterproof materials. In addition to a waterproof layer at the inner surface, the chemical reaction pool and swimming pool must have the decorative ceramic tiles stuck at their inner surface. If a water pool has a large floor area, its own weight should be balanced against the buoyancy of the underground water to prevent the structure of the pool from distortion. After applying a rigid waterproof layer of 2 mm in thickness, an ordinary water pool should have an additional flexible coating layer, sandwiched with carrier reinforced materials in it, attached at its joint seam and corner.

The flexible coating layer should be protected by building up the waterproof mortar course at its outer surface or by trowel coating **CN2000®B** waterproof mortar at 10 mm in thickness twice. It should be compacted tightly and trowel smoothly twice after shrinkage.

b. As for waterproofing a deep well formed by using the shaft-sinking, freezing excavation or large-bore drilling methods, the first thing to do is install the concrete shaft wall in a ring shape. The shaft wall should be built stronger than the side pressure of the stratum. The inner and outer surface of the shaft wall should be covered with a rigid waterproof layer 2 mm thick. Then, each segment of shaft wall is put into the well body gradually. At the joint seam of the shaft wall, it should have a water-stop bar and water-stop strip with attached outside type. If there is evidence of corrosion in the deep well, waterproof mortar should be applied to the inner surface of the shaft wall.

c. Waterproofing a Landfill should be conducted, according to the code "CJJ 17-2004 Technical code for municipal solid waste sanitary landfill." The key points for this type of project are the seepage prevention, filtration and conveyance of leachate from the rubbish. Leachate should never be allowed to leak into the environment.

d. If there are strict requirements on the deep well for waterproofing and damp-proofing, the rigid waterproof layer should be built in between the two lining layers. Besides, the inner surface of the shaft wall should be covered with rigid waterproof layer or rigid and flexible composite waterproof layer of 2 mm thick. When necessary, the shaft wall can be built into a reinforced concrete structure in the form of a hollow glass liner, which will not only allow the waterproof layer to be made at the three sides of it, but also the pipe to be installed between the two lining layers for ventilation from the bottom of the well to the top so as to ensure the dryness in the well.

10.6.2 As for the detailed waterproof structure, see the diagrams 10.6–1 to 10.6–2.

As for the method to be used for water proofing and anticorrosion at the critical project, see the reference diagram 10.6–1 and as for the method to be used for water proofing at the ordinary water pool, see the reference diagram 10.6–2.

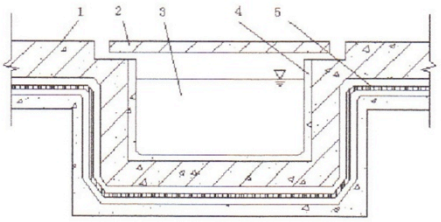

Diagram 10.6–1 waterproof structure of anticorrosive water tank
1- base plate of structure; 2- cover plate of pond or pit; 3- pond or pit; 4- waterproof mortar layer; 5- rigid and flexible composite waterproof coating

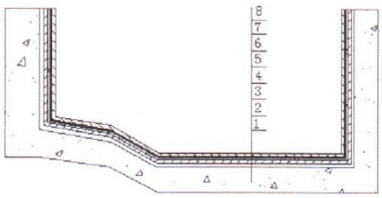

Diagram 10.6–2 waterproof structure of general water tank
1- cast-in-place reinforced concrete; 2- cement mortar leveling course; 3- ZHONGHE 2000 waterproof coating; 4- flexible waterproof coating with reinforced layer; 5- protective layer by pea gravel concrete; 6- laid to falls; 7- decorative adhesive layer; 8- decorative layer

10.7 Waterproofing roads, railways, bridges and airports

10.7.1 Requirements on the project design and construction

a. The surface of concrete road, drainage culvert and ditch can be protected using a rigid and flexible composite waterproof layer 1.5~2 mm thick. The waterproof mortar sandwiches carrier reinforced materials and should be attached at the joint seam and corner.
b. For waterproofing a traffic tunnel, see the section 10.8 "project of damp-proofing and seepage prevention in the tunnel and cavern house."

c. For waterproofing a reinforced concrete bridge, the rigid and flexible composite materials can be used to set up a waterproof and anticorrosive layer of 1.5~2 mm thick over the surface of concrete structure and beneath the surface of a pitch road. As for the pillar of cable stayed bridge, the rigid waterproof materials can be used on it for waterproofing and anticorrosion.

d. **CN2000®B** product in a layer 1~1.5 mm thick or rigid and flexible composite waterproof materials in a layer 2 mm thick can be used at the basement of an airport for waterproofing. The waterproof and wear-resistant **CN2000®B** mortar, prepared by mixing iron powder and quartz in it, is used to build the airport runway. It will make the runway waterproof and skid resistance, making the scores unnecessary.

10.7.2 As for the detailed waterproof structure, see the diagrams 10.7–1 and 10.7–2.
Diagram 10.7–1 waterproof structure of concrete structure bridge

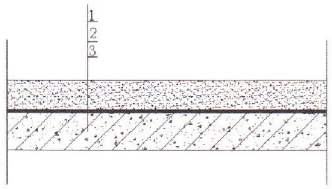

Diagram 10.7–1 waterproof structure of concrete structure bridge
1- asphalt concrete; 2- ZHONGHE 2000 waterproof coating; 3- structure layer of reinforced concrete

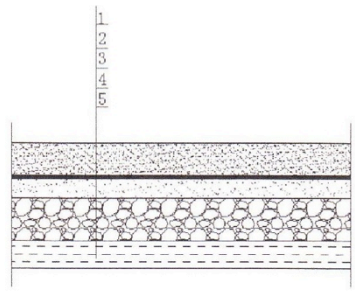

Diagram 10.7–2 waterproof structure of highway frost boil
1- pea gravel concrete; 2- ZHONGHE 2000 waterproof coating; 3- waterproof mortar course; 4- gravel bedding course; 5- unstable frost boil layer

10.8 Waterproofing tunnels and caverns

10.8.1 Key point of project design and construction

a. The waterproof layer is built up at the outer surface of the tunnel's lining wall by using the open cut method. In a wall-attached type of tunnel, the waterproof layer is built up between the two lining walls by using the undercutting method. In a wall-separated type of tunnel, the waterproof layer is established at the outer surface of the inner lined enclosure wall. The waterproof pipe plate, coated with rigid waterproof materials, is installed during the chiseling process in the shield tunnel.

b. A layer of **CN2000®B** product 1.5~2 mm thick (operable by spray coating) or a layer of rigid and flexible composite materials over 2 mm thick can be used as the waterproof layer. It is appropriate for the water-stop bar or caulking rubber sealing materials to be used in the joint seam. The water-stop bar of a type that is attached outside or flexible waterproof coating layer of 2 mm thick with carrier reinforced materials should be applied on its outer surface. The flexible waterproof coating layer should have a covered width over 250 mm.

c. A concealed pipe should be installed, buried outside the lining wall of a wall-attached type of tunnel to lead water to the open or covered drainage ditch. The open drainage ditch should have a slope of 2% and a back-filtration layer should be laid down in the covered drainage ditch. If water cannot be discharged by itself, a collective well should be installed to raise the water level. The dropping water from the top of the tunnel is led into the drainage channel outside wall of the tunnel through a board with holes in it (supported in transverse direction) at the shoulder part of vault in a wall-separated type of tunnel. The floor board and drainage channel of the tunnel in a wall-separated type can be protected by use of **CN2000®B** product or waterproof mortar. When necessary, a ventilation and temperature adjustment system can be added between the two lining walls in a wall-separated type to ensure the dryness of the tunnel.

10.8.2 As for the detailed waterproof structure, see the diagrams 10.8–1 to 10.8–3.

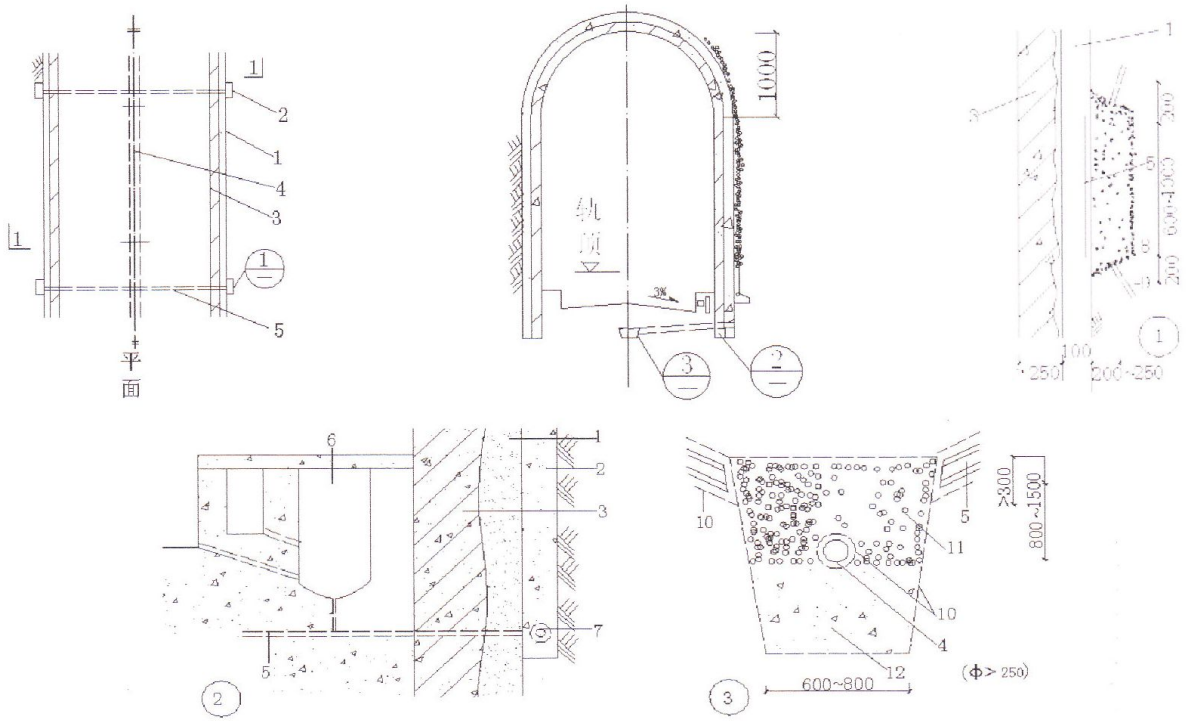

Diagram 10.8–1 drainage structure of the lining wall in the wall-attached type tunnel by undercutting methods

1- initial supporting; 2- blind ditch; 3- main structure; 4- center drainage blind pipe; 5- lateral drainage pipe; 6- open drain; 7- longitudinal collecting blind pipe; 8- isolating course; 9- tapping hole; 10- nonwoven fabric; 11- no-fine concrete; 12- pipe support concrete

Diagram 10.8–2 drainage structure of the lining wall in the wall-separated type tunnel by undercutting methods

1- guide slot orifice plate with lateral brace; 2- leakage water hole; 3- passageway of inspection; 4- drainage channel; 5- passageway of inspection for guide slot orifice plate

10.9 Waterproofing hydroelectric projects

10.9.1 The key point of project design and construction

a. At the deep part of river bank and dam, it can be applied to grout **CN2000®B** slurry solution into it for seepage prevention. The method to be used for slurry grouting should be based on the "Technical Regulations of Spray Coating and Grouting of **CN2000®** Series of Waterproof Materials."

b. A layer of **CN2000®B** product 1.5~2 mm thick or **CN2000®B** waterproof mortar over 5 mm thick can be used as the waterproof layer at the surface of river bank, dam, water channel, grit chamber and covered way. If there is serious leakage at one part of the structure, the waterproof materials slurry can be grouted behind the wall of the structure.

c. If a dam is crazed, the crack should be filled and plugged up by use of sealing materials, quick leakage-plugging materials and waterproof mortar. Then, drill holes at the junction of the edges of the crack and grout the waterproof materials slurry solution into the holes.

d. If a drainage pipe is broken, a small-sized crack on the pipe can be coated repeatedly with **CN2000®B**. A large-sized crack on the pipe can be coated with flexible waterproof materials and carried reinforced materials by coating the slurry of waterproof materials on the structure, while winding up the carried reinforced materials on the structure.

10.9.2 As for the detailed waterproof structure, see the diagrams 10.9–1 to 10.9–4.

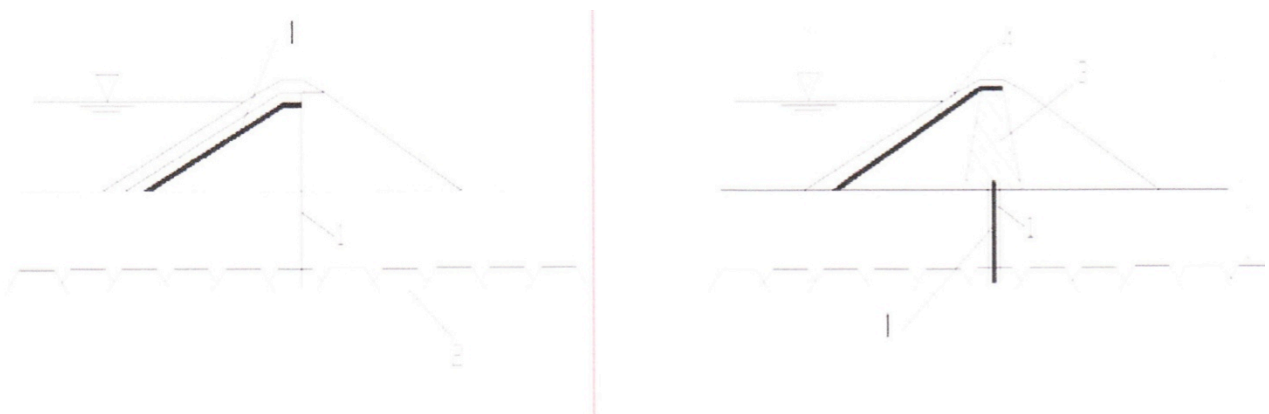

Diagram 10.9–1 watertight diaphragm of dam base and dam body
1- grouting continuous wall (waterproof coating); 2- ground floor foundation base;
3- waterproof core wall of dam body; 4- ZHONGHE 2000 waterproof coating

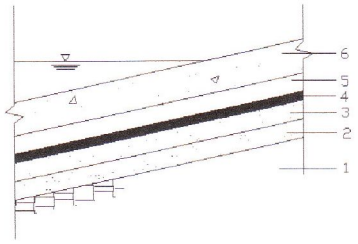

Diagram 10.9–2 impervious structure of slope surface
1- dam body; 2- supported course; 3- under bedding course; 4- composite waterproof coating; 5- upper bedding course; 6- protective layer

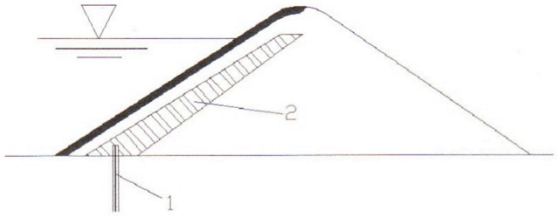

Diagram 10.9–3 cutoff wall of dam face
1- grouting cutoff wall; 2- cutoff wall of dam face and ZHONGHE 2000 waterproof coating

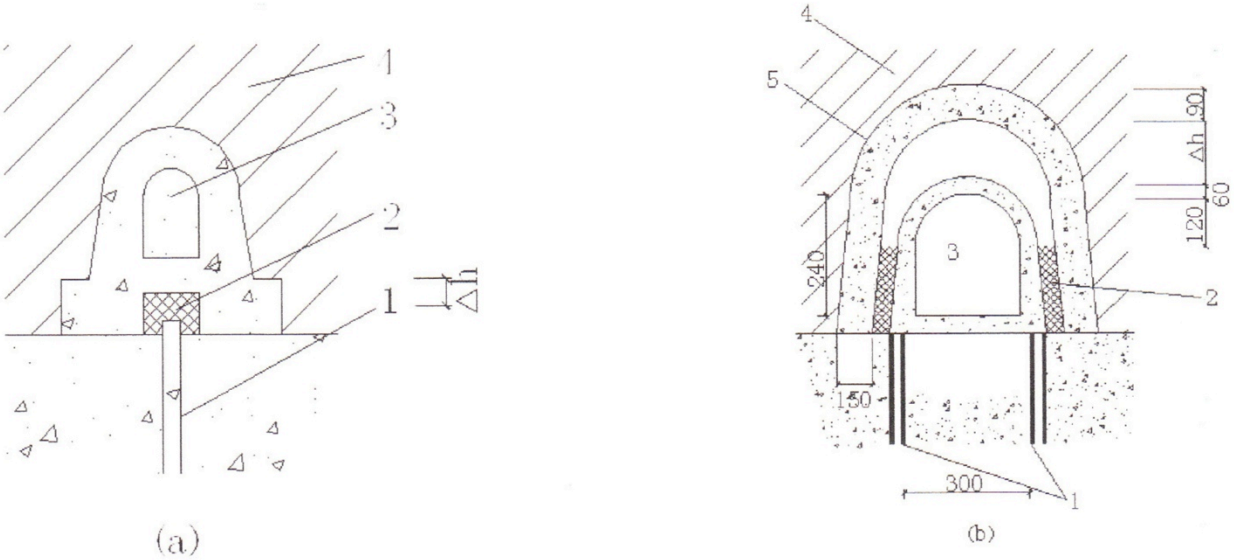

Diagram 10.9–4 joint of diaphragm wall and covered way
(a) joint of base plate type with single wall (The △h is the most possible settlement.)
(b) joint of cap type with double wall
1- diaphragm wall; 2- plastic material; 3- covered way; 4- core wall; 5- cap of precast concrete

10.10 Renovating a waterproofing project

The key point of project design and construction is as the follows:

a. The waterproof layer, whether it is a rigid, flexible, rigid and flexible composite or a waterproof mortar layer made from **CN2000®** series of waterproof materials, can be repaired and renovated through use of the materials, which were used originally for the project. During the renovation, however, the edge of the broken part should be coated 100 mm wider than the surface to be safe.

b. If a water leak is found on an old roof or on an abnormal structure, the leak site should be cleared and the residue around the original waterproof layer should be removed. Then, coat the broken part with a flexible waterproof layer, in which carried reinforced materials is added.

c. If a leakage of water is found on a structural joint, it should be treated by replacing the sealing materials in the original type or by filling waterproof mortar and **CN2000®A** in it. Simultaneously, curve a slot (15 mm wide and 20 mm deep) along the joint and clean the wall of the joint. Rub the **CN2000®** product, mixing fiber materials in it, into the strip; insert the strip into the joint; and, press the strip flatly.

c. As for a crack with a water leak, you should drain out the water and stop the water flow or grout waterproof materials slurry at its back side and then, the crack should be filled and sealed with the sealing materials.

CN2000® a Revolutionary Concrete Solution

kelso coatings

Appendix A: Standards, Specifications and Regulations

1. GB 18445-2001 Cementitious capillary crystalline waterproofing materials
2. JC/T894-2001 Polymer modified cementitious waterproofing coating
3. GB/T 16777-1997 Test methods for building waterproof coatings
4. HJBZ 4-1999 The technical requirement for environmental labeling products --- water based coating
5. GB 50108-2001 Technical code for waterproofing of underground works
6. GB 50208-2002 Code for acceptance of construction quality of underground waterproof
7. GB 50207-2002 Code for acceptance of construction quality of roof
8. Specifications for construction and acceptance of architecture project, Guangdong: Zhuhai Publishing House, 2000
9. Local waterproof standard in Beijing: Recommended method for waterproof project at toilet and bathroom, Recommended method for waterproof project at basement
10. Compiled by Building Design Standardization Office in the region of North China and Northwest China, Commonly used diagram collection of building structure: 88J5-X1 roofing, 88J6-1 underground waterproof project, 88J8 Bathroom and washing basin
11. GB 50299-1999 Code for construction and acceptance of metro engineering
12. JTJ 042-1994 Technical specifications for construction of highway tunnel
13. GB J97-1987 Specifications for constructions and acceptance of road concrete pavement
14. JTJ 073.1-2001 Technical specifications for maintenance of highway asphalt pavement
15. GB 50092-1996 Code for construction and acceptance of asphalt pavement
16. SL 62-1994 Construction specification of cement grouting used for hydraulic structures
17. Specifications relating to design and construction of hydroelectric project
18. CJJ 17-2004 Technical code for municipal solid waste sanitary landfill
19. GB 50290-1998 Technical standard for applications of geosynthetics
20. JGJ/T 105-1996 Technical specifications for mechanized mortar spray and plane construction
21. CJJ 62-1995 Technica1 specification for repairing water creep of houses

CN2000® a Revolutionary Concrete Solution

kelso coatings